Trade of Sheet Metalwork	
Module 2:	**Geometry and Pattern Development**
Unit 7:	**Gusset Pieces**
	Phase 2

Table of Contents

List of Figures **3**

List of Tables **3**

Document Release History **4**

Module 2 – Geometry and Pattern Development **5**

Unit 7 – Gusset Pieces 5
Learning Outcome: 5
Key Learning Points: 5
Training Resources: 5
Exercise: 5
Key Learning Points Code: 5

Gusset Pieces **7**

Self Assessment **8**

Index **9**

List of Figures

Figure 1 - Gusset Pieces 6

List of Tables

Document Release History

Date	Version	Comments
31/07/06	First draft	
04/03/14	2.0	SOLAS transfer

Module 2 – Geometry and Pattern Development

Unit 7 – Gusset Pieces

Duration – 12 Hours

Learning Outcome:

By the end of this unit each apprentice will be able to:

- Develop and layout the patterns for right and oblique gusset pieces
- Identify the purpose and applications of right and oblique gusset pieces

Key Learning Points:

D	Gusset development, right and oblique.
Rk	Forming and shaping of gusset pieces.
Rk	Applications of gusset pieces.
D	Geometrical differences between right and oblique types.
Rk	Methods of attachment to cylindrical pipes.

Training Resources:

- Drawing instruments, equipment and materials
- Textbook: The Geometry of Sheet Metalwork
- Instructor handouts

Exercise:

Sample exercise - Figure 1.

Key Learning Points Code:

M = Maths D= Drawing RK = Related Knowledge Sc = Science
P = Personal Skills Sk = Skill H = Hazards

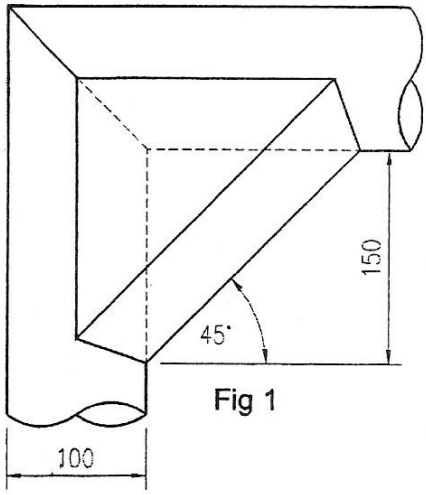

Fig 1

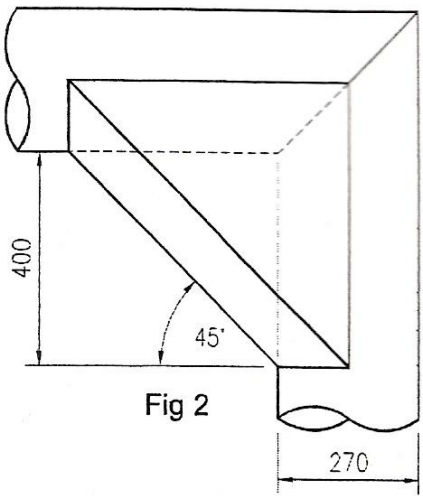

Fig 2

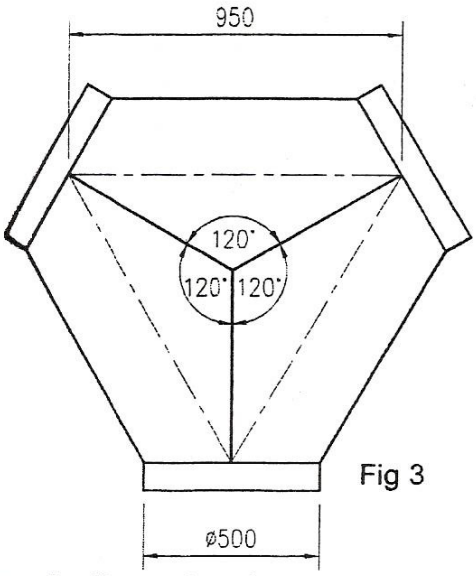

Fig 3

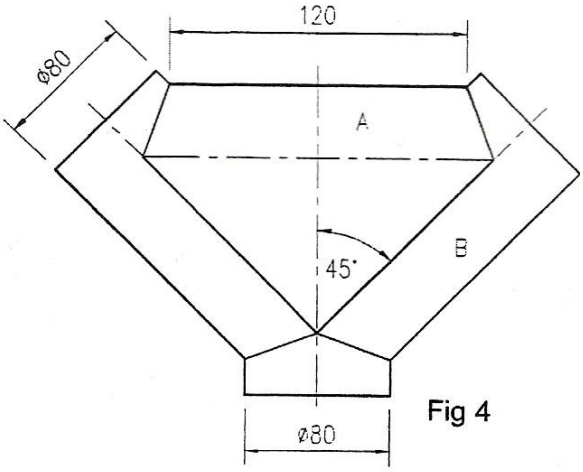

Fig 4

Exercise/Procedure Instructions
Answer Samle Questions
GUSSET PIECES

1. Fig. 1 shows the elevation of two pipes strengthened by a gusset piece. Develop the full template for the gusset piece. Scale: 1 : 2.

2. Fig. 2 shows the elevation for two pipes strengthened by a gusset piece. Develop the full template for the gusset piece. Scale: 1 : 5.

3. Fig. 3 shows the elevation of three gusset pieces identical in shape and size and symmetrical about a common centre, forming a junction piece. Develop the full template for one gusset piece. Scale: 1: 10.

4. Fig.4 shows the elevation of an arrangement of a gusset piece and cylinders forming a junction piece. Develop the full templates for A and B. Scale: 1 : 2.

Figure 1 - Gusset Pieces

Gusset Pieces

The pattern for Gusset Pieces has two flat cheeks triangular in shape. These are at either end of the pattern with the cylindrical part in the middle separating them. The cylindrical part is rolled into shape leaving the triangular parts flat.

Gusset pieces are to be found on 90º bends in round work. They help prevent reduction in the flow through the pipe. A 90º bend has a sharp turn and efficiency may be reduced on account of this. A segment bend would be the preferred option but would cost more to fabricate.

The gusset piece is a more economical way of reducing any bottleneck that may occur.

Self Assessment

Index

G

Gusset Pieces, 9